PS30SW II

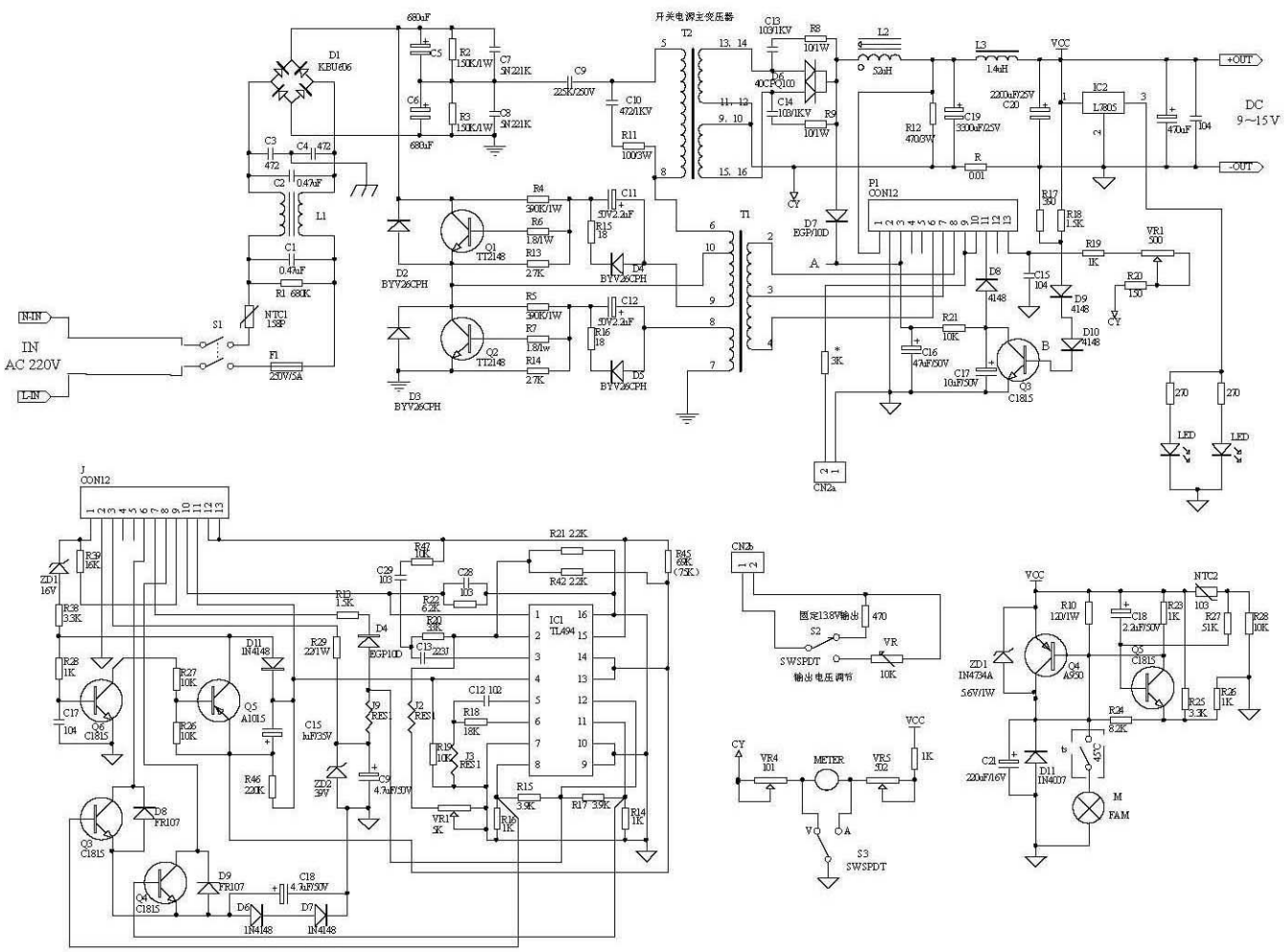

Title		
Size A3	Number	Revision
Date: 13-Apr-2010		Sheet of
File: E:\jig' 系列产品 5V30A开关电源\9-		5V30A开关电源.Ddb